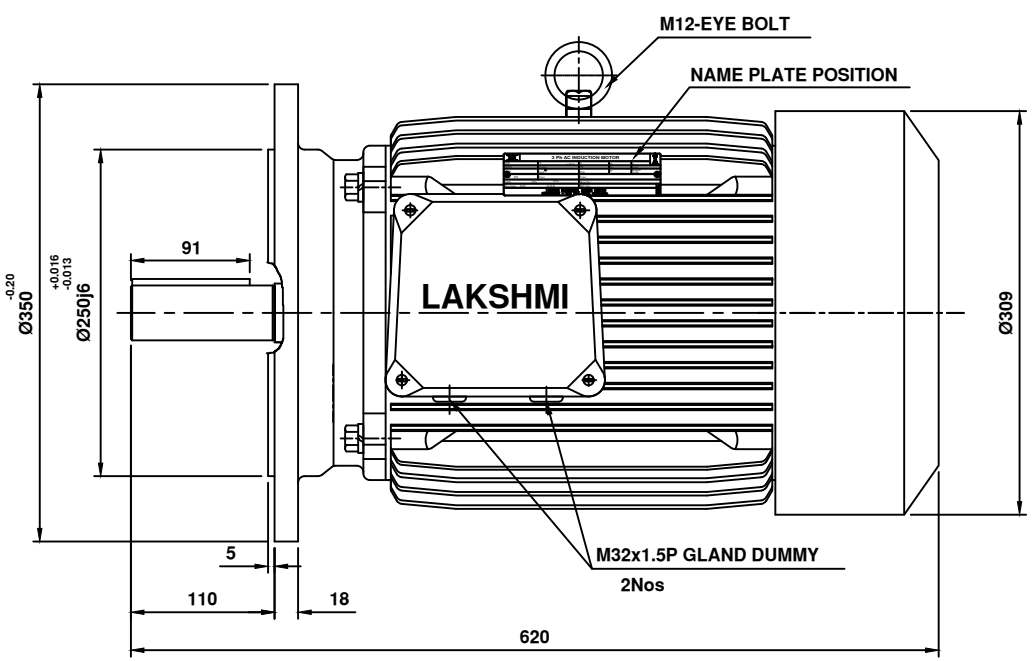

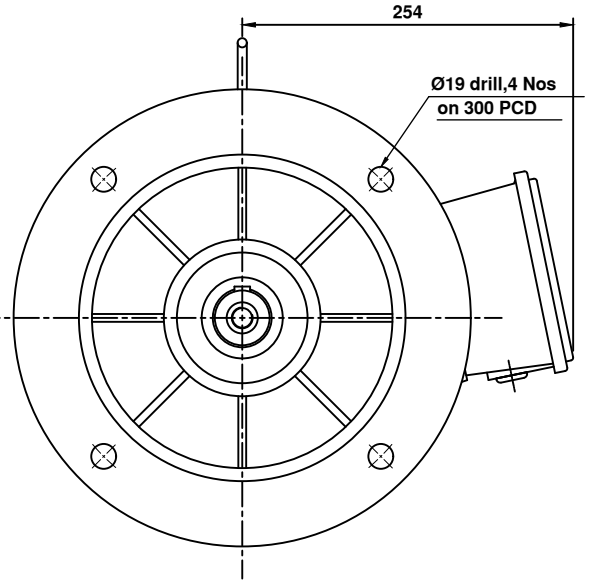

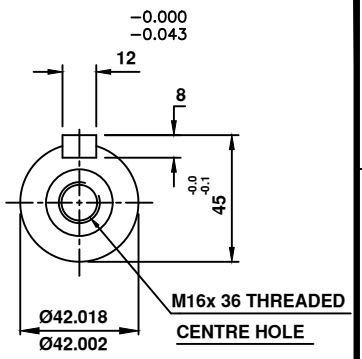

EXTENSION DETAILS

TERMINAL BOX DETAILS

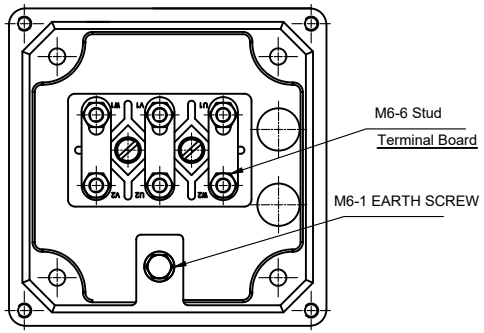

NAME PLATE DETAILS (IS 12615 : 2018)	
MARKING	CE
Frame	LE 160 M
Duty	S1
Class of insulation	F
Frequency, Hz	50 ±5%
Pole	2
Connectoin	Delta
Output in KW	15
Voltage in volts	415 ±10%
F.L.Current in Amps	26
Speed in RPM	2940
% Efficiency	90.3(IE2)
Protection	IP-55
Power Factor	0.88
BRG DE	6309 ZZC3
BRG NDE	6309 ZZC3

ALL DIMENSIONS ARE IN mm

LINEAR DIMENSIONS (MACHINING)	GENERAL TOLERANCES				
	ABOVE	0	30	100	300
	UPTO	30	100	300	1000
	TOL	±0.2	±0.3	±0.5	±0.8
ANGLES	± 1/2°				

DCR. NO	ZONE	ALTERATIONS	SIGN/ DATE

PREPARED	H.H		02-12-2023
CHECKED	V.B		02-12-2023
APPROVED	R.R		02-12-2023
SCALE	NTS		
QUANTITY	1 No		
MATERIAL			
WEIGHT IN kg.	ROUGH		RAW MATERIAL CODE
	FINISHED		

LAKSHMI ELECTRICAL DRIVES LIMITED

COIMBATORE - 641 004

GA DRAWING

15 kW, 2 POLE, IE2

MODEL	LE 160 M	DRG.No.	LE16025001	REV. NO	00