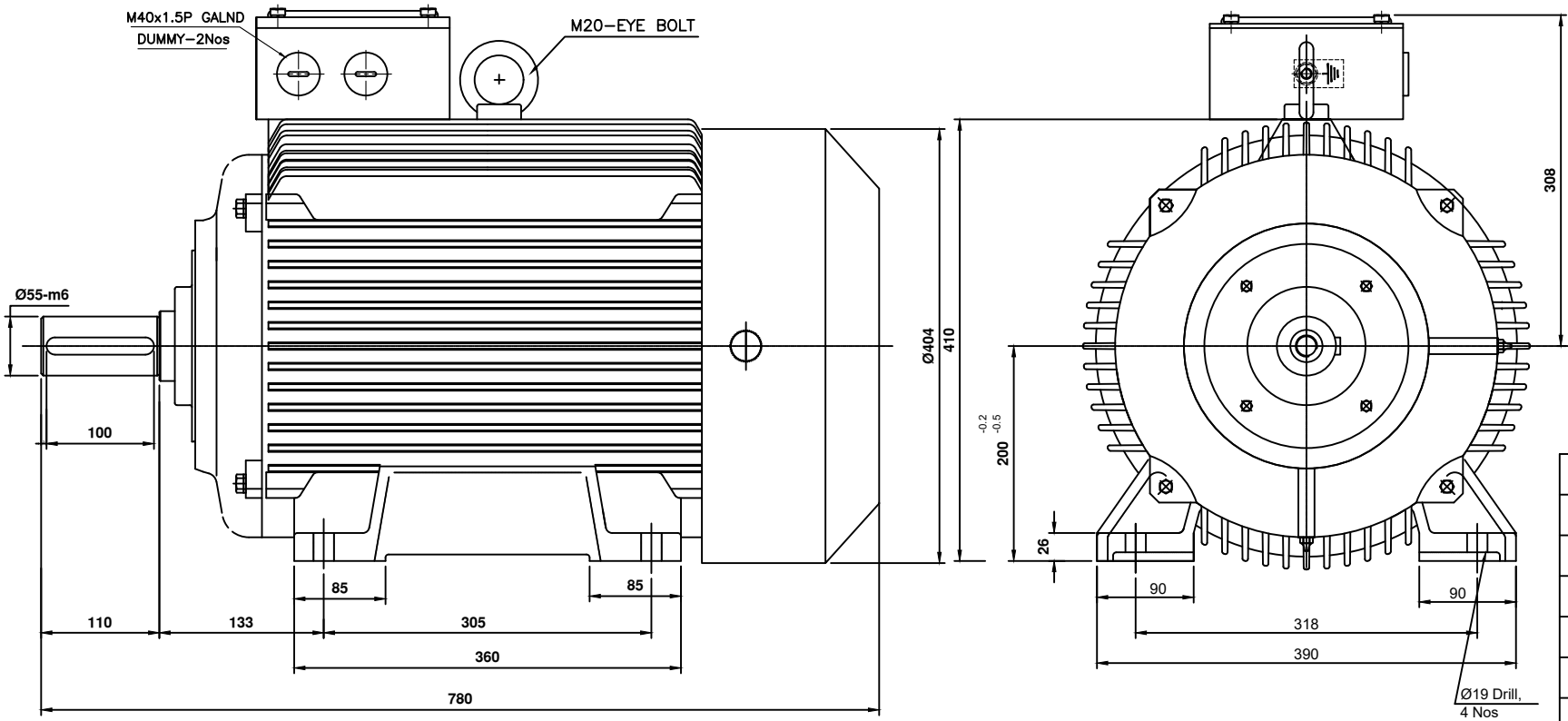

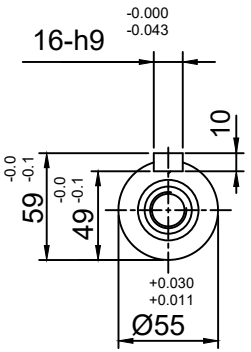

EXTENSION DETAILS

TERMINAL BOX DETAILS

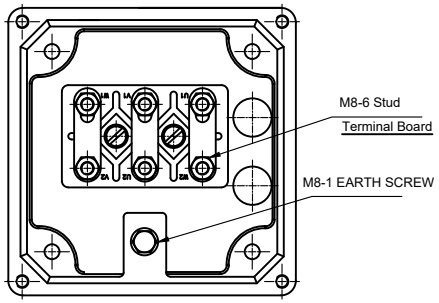

NAME PLATE DETAILS (IS 12615 : 2018)	
MARKING	CE
Frame	LE 200L
Duty	S1
Class of insulation	F
Frequency, Hz	50 ±5%
Pole	6
Connectoin	Delta
Output in KW	18.5
Voltage in volts	415 ±10%
F.L.Current in Amps	33
Speed in RPM	970
% Efficiency	90.4(IE2)
Protection	IP-55
Power Factor	0.85
BRG DE	6312 ZZC3
BRG NDE	6312 ZZC3

ALL DIMENSIONS ARE IN mm

LINEAR DIMENSIONS (MACHINING)	GENERAL TOLERANCES				
	ABOVE	0	30	100	300
	UPTO	30	100	300	1000
	TOL	±0.2	±0.3	±0.5	±0.8
ANGLES	± 1/2°				

DCR. NO	ZONE	ALTERATIONS	SIGN/ DATE

PREPARED	H.H		04–12–2023
CHECKED	V.B		04–12–2023
APPROVED	R.R		04–12–2023
SCALE	NTS		
QUANTITY	1 No		
MATERIAL			
WEIGHT IN kg.	ROUGH		RAW MATERIAL CODE
	FINISHED		

LAKSHMI ELECTRICAL DRIVES LIMITED

COIMBATORE - 641 004

GA DRAWING

18.5 kW, 6 POLE, IE2

MODEL	LE 200L	DRG.No. LE20063004	REV. NO	00