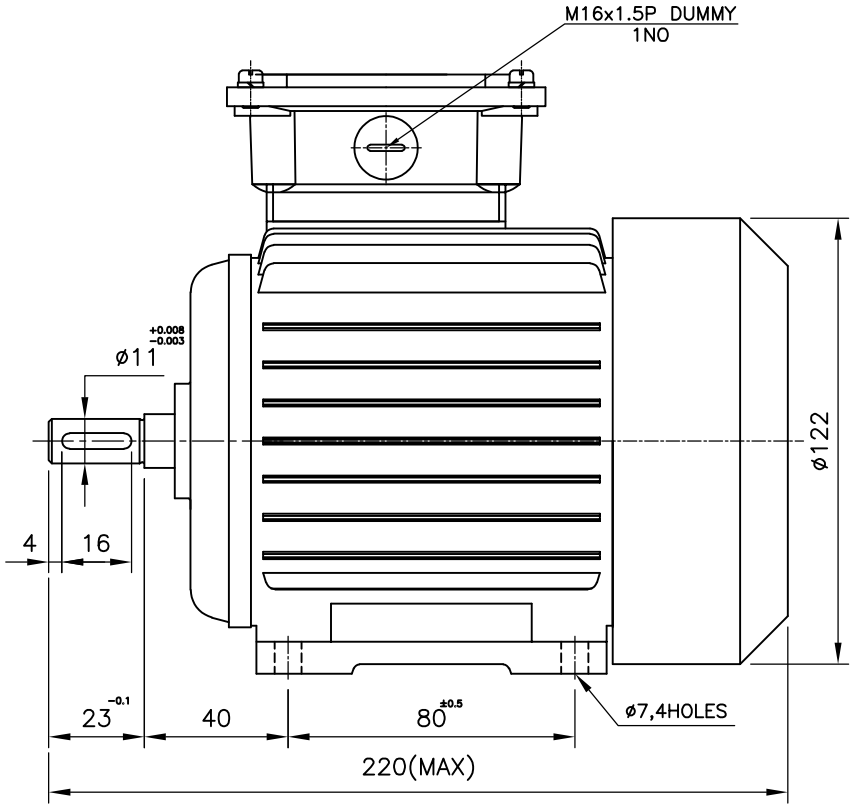

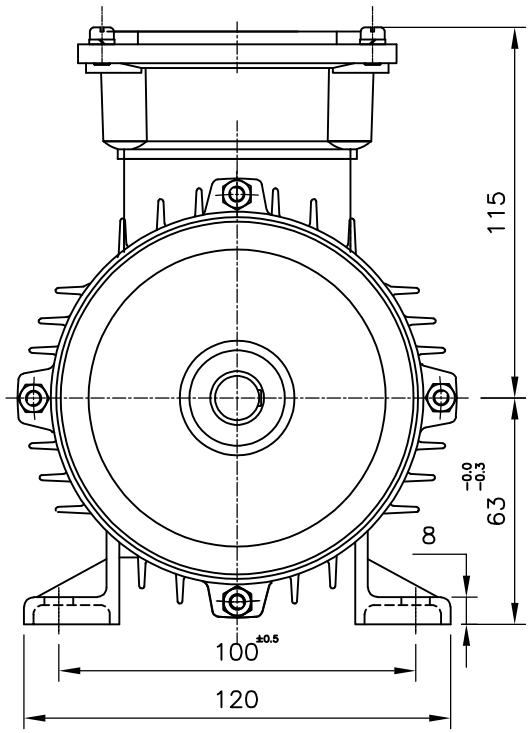

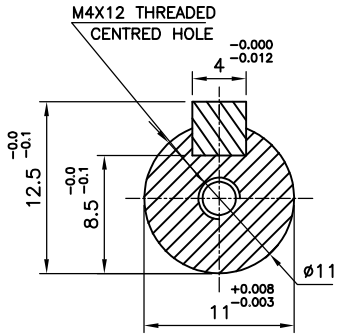

KEYWAY DETAIL

TERMINAL BOX DETAILS

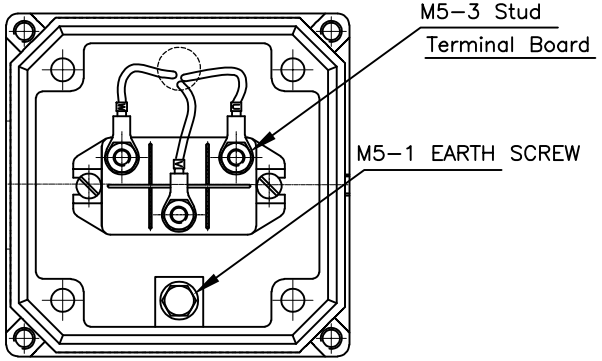

NAME PLATE DETAILS (IS12615:2018)	
Marking	CE
Frame	LE 63
Duty	S1
Class of Insulation	F
Frequency, Hz	50±5%
Pole	2
Connection	STAR
Output in KW	0.18
Voltage in Volts	415±10%
F.L.Current in Amps	0.84
Speed in RPM	2750
% Efficiency	65.9(IE3)
Brg.(DE)	6202 2RSC3
Brg.(NDE)	6202 2RSC3
Power Factor	0.6
Protection	IP55

ALL DIMENSIONS ARE IN mm

LINEAR DIMENSIONS (MACHINING)	GENERAL TOLERANCES				
	ABOVE	0	30	100	300
	UPTO	30	100	300	1000
	TOL	±0.2	±0.3	±0.5	±0.8
ANGLES	± 1/2°				

DCR. NO	ZONE	ALTERATIONS	SIGN/ DATE

PREPARED	K.SP		11−06−2024
CHECKED	ASP		11−06−2024
APPROVED	K.K.N		11−06−2024
SCALE	NTS		
QUANTITY	1 No		
MATERIAL	−		
WEIGHT IN kg.	ROUGH		
	FINISHED		

LAKSHMI ELECTRICAL DRIVES PRIVATE LIMITED
COIMBATORE − 641 004

G.A DRAWING
0.18KW, 2 POLE, IE3

MODEL	LE 63	DRG.No.LEH06323001	REV. NO	00