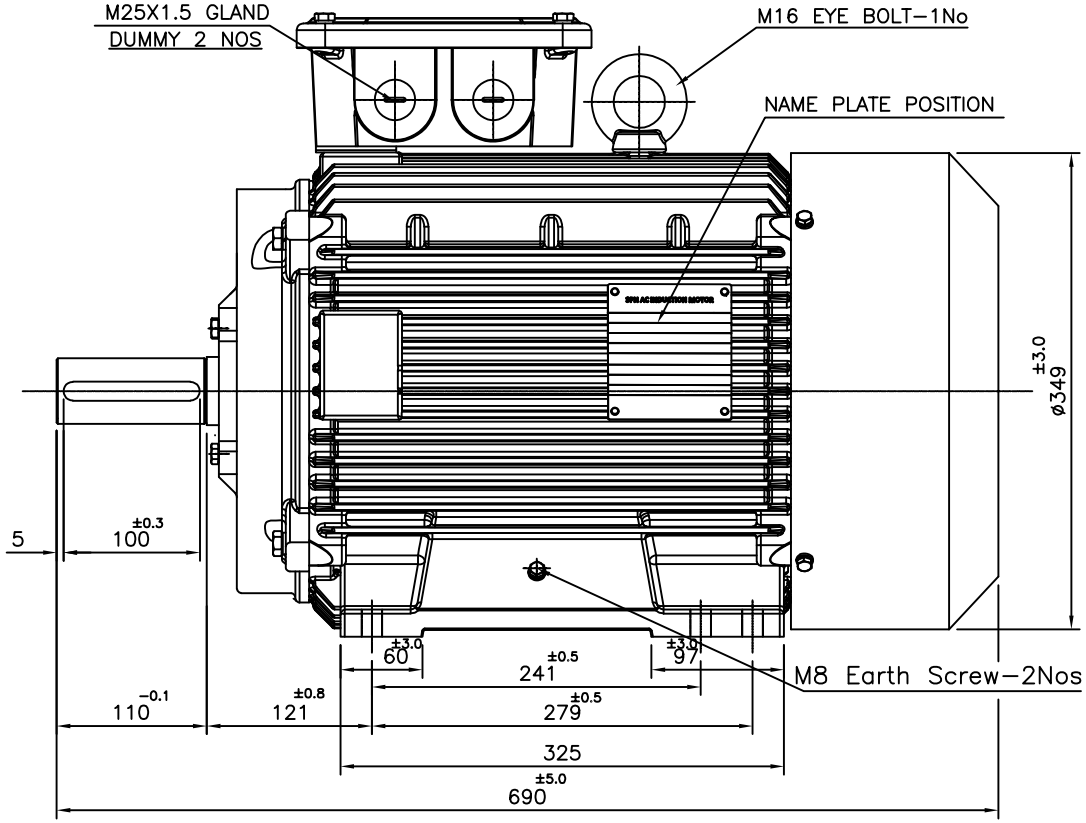


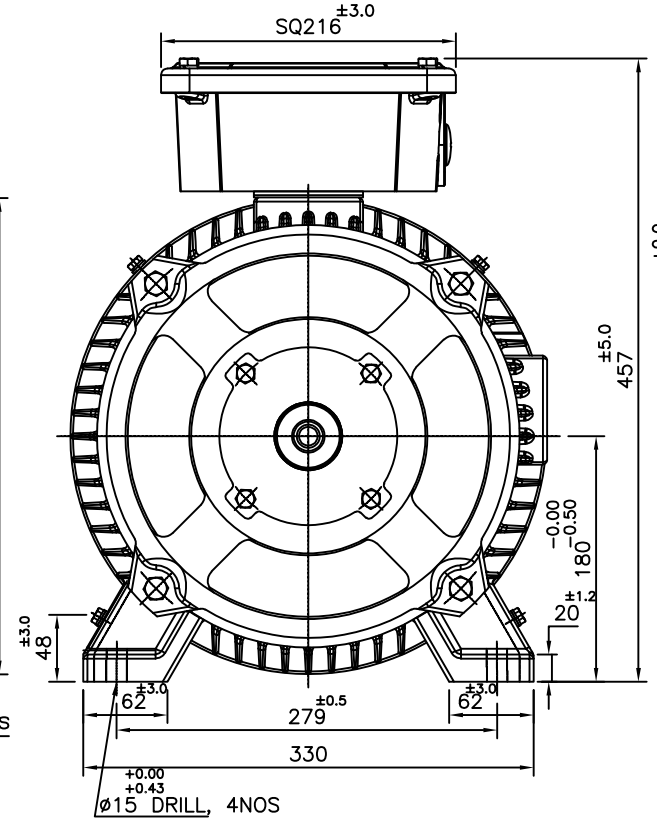


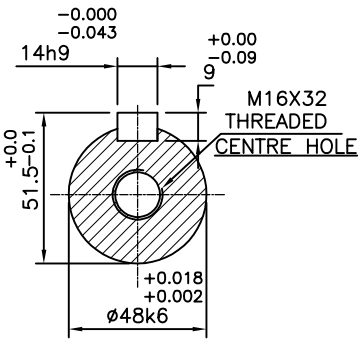


EXTENSION DETAILS

TERMINAL BOX DETAILS

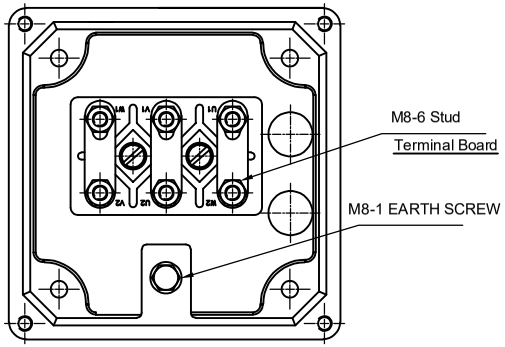


| NAME PLATE DETAILS (IS 12615 : 2018) | |
|---|---|
| MARKING | CE |
| Frame | LE 180M |
| Duty | S1 |
| Class of insulation | F |
| Frequency, Hz | 50 ±5% |
| Pole | 2 |
| Connectoin | Delta |
| Output in KW | 22 |
| Voltage in volts | 415 ±10% |
| F.L.Current in Amps | 38 |
| Speed in RPM | 2950 |
| % Efficiency | 92.7(IE3) |
| Protection | IP-55 |
| Power Factor | 0.9 |
| BRG DE | 6310 ZZC3 |
| BRG NDE | 6310 ZZC3 |

ALL DIMENSIONS ARE IN mm

| LINEAR DIMENSIONS (MACHINING) | GENERAL TOLERANCES | | | | |
|---|---|---|---|---|---|
| | ABOVE | 0 | 30 | 100 | 300 |
| | UPTO | 30 | 100 | 300 | 1000 |
| | TOL | ±0.2 | ±0.3 | ±0.5 | ±0.8 |
| ANGLES | ± 1/2° | | | | |

| DCR. NO | ZONE | ALTERATIONS | SIGN/ DATE |
|---|---|---|---|

| | | | |
|---|---|---|---|
| PREPARED | K.SP | | 12–06–2024 |
| CHECKED | ASP | | 12–06–2024 |
| APPROVED | K.K.N | | 12–06–2024 |
| SCALE | NTS | | |
| QUANTITY | 1 No | | |
| MATERIAL | | | |
| WEIGHT IN kg. | ROUGH | | |
| | FINISHED | | |

LAKSHMI ELECTRICAL DRIVES PRIVATE LIMITED
COIMBATORE – 641 004

G.A DRAWING
22 kW, 2 POLE, IE3

| MODEL | LE 180M | DRG.No. LEH18023001 | REV. NO | 00 |
|---|---|---|---|---|