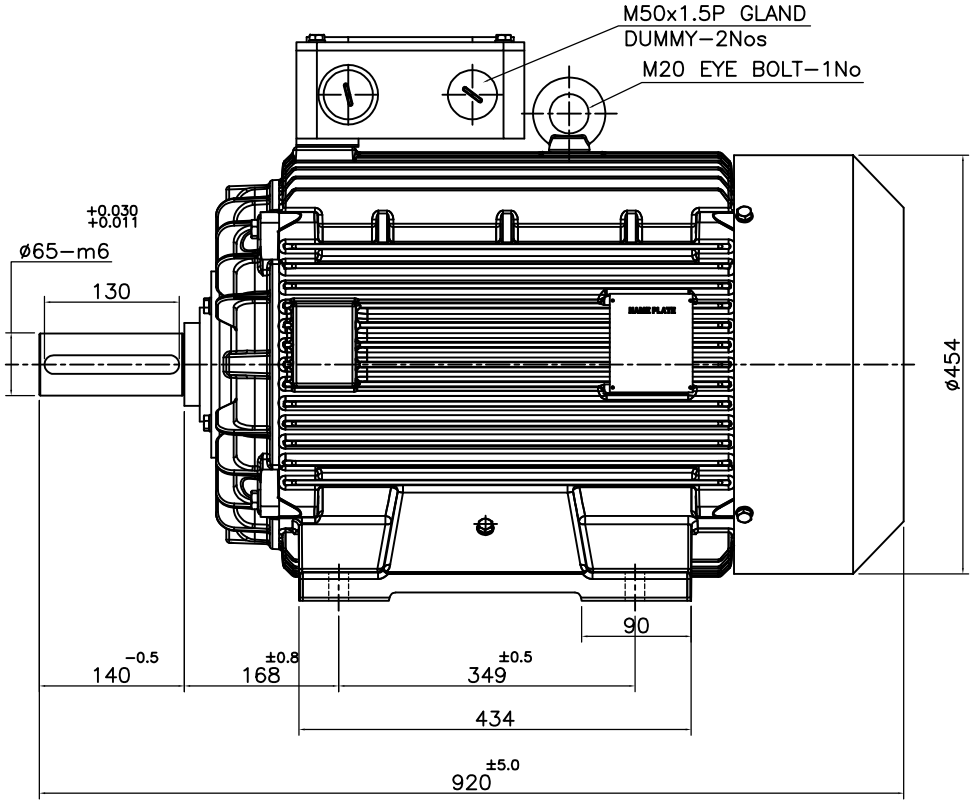

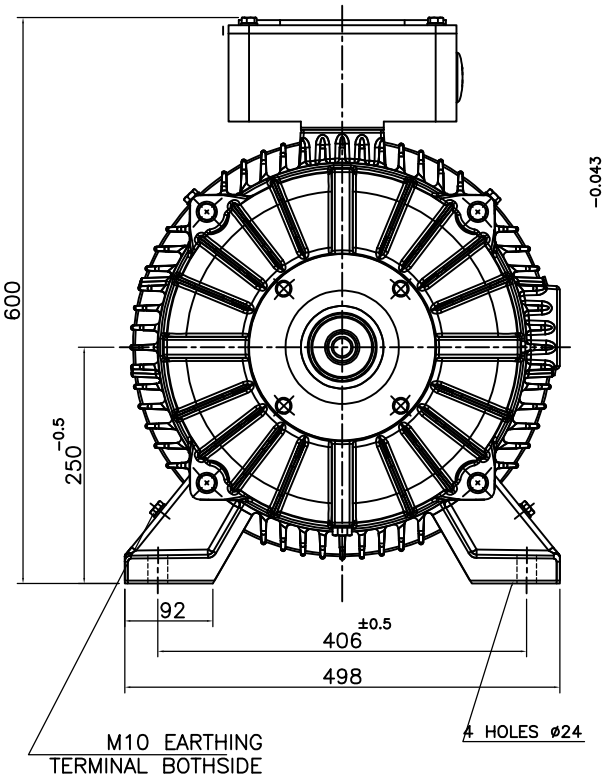

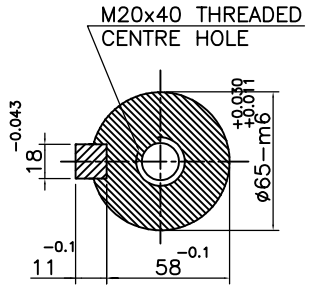

TERMINAL BOX DETAILS

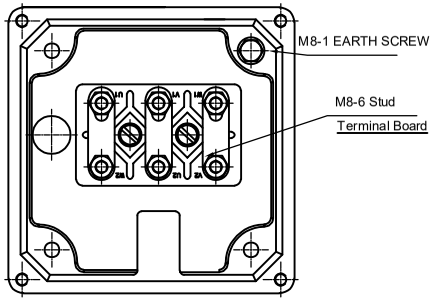

NAME PLATE DETAILS (IS 12615 : 2018)	
MARKING	CE
Frame	LE 250M
Duty	S1
Class of insulation	F
Frequency, Hz	50 ±5%
Pole	4
Connectoin	Delta
Output in KW	55
Voltage in volts	415 ±10%
F.L.Current in Amps	99
Speed in RPM	1475
% Efficiency	94.6(IE3)
Protection	IP-55
Power Factor	0.86
BRG DE	6315 C3
BRG NDE	6314 C3

ALL DIMENSIONS ARE IN mm					
LINEAR DIMENSIONS (MACHINING)	GENERAL TOLERANCES				
	ABOVE	0	30	100	300
	UPTO	30	100	300	1000
	TOL	±0.2	±0.3	±0.5	±0.8
ANGLES	± 1/2°				

DCR. NO	ZONE	ALTERATIONS	SIGN/ DATE

PREPARED	K.SP		12–06–2024
CHECKED	ASP		12–06–2024
APPROVED	K.K.N		12–06–2024
SCALE	NTS		
QUANTITY	1 No		
MATERIAL			
WEIGHT IN kg.	ROUGH		RAW MATERIAL CODE
	FINISHED		

LAKSHMI ELECTRICAL DRIVES LIMITED
COIMBATORE - 641 004

GA DRAWING
55 kW, 4 POLE, IE3

MODEL	LE 250M	DRG.No. LEH25043001	REV. NO	00