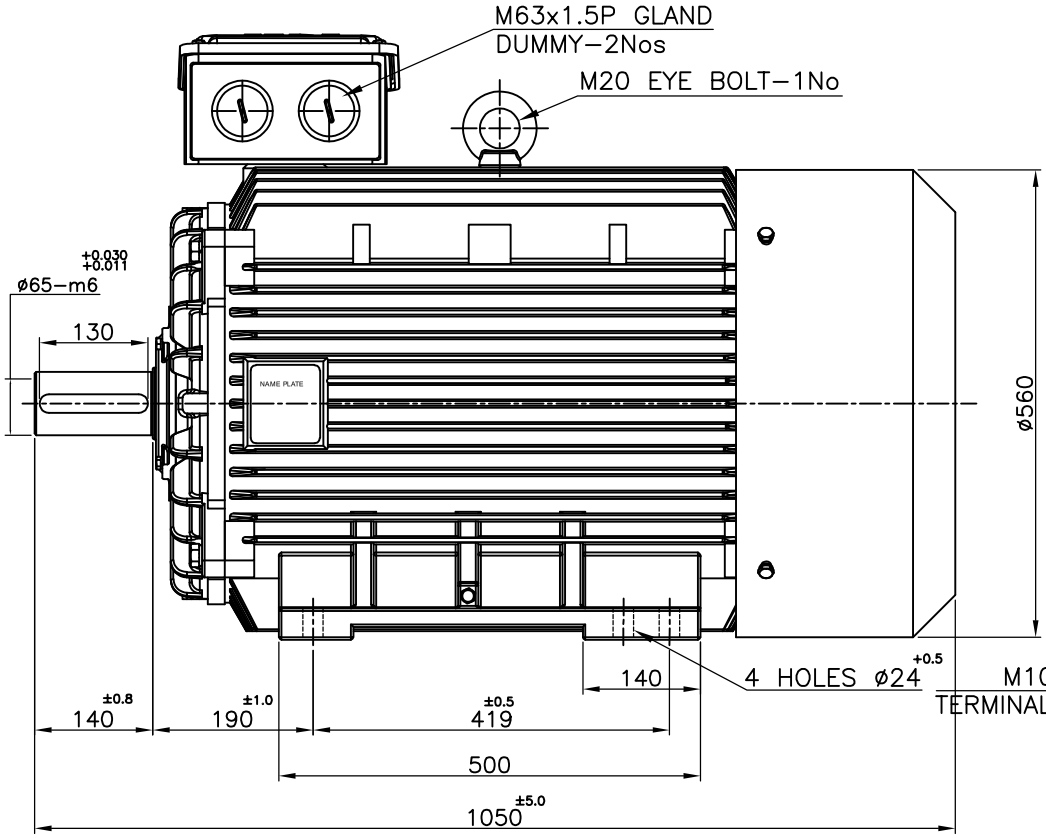

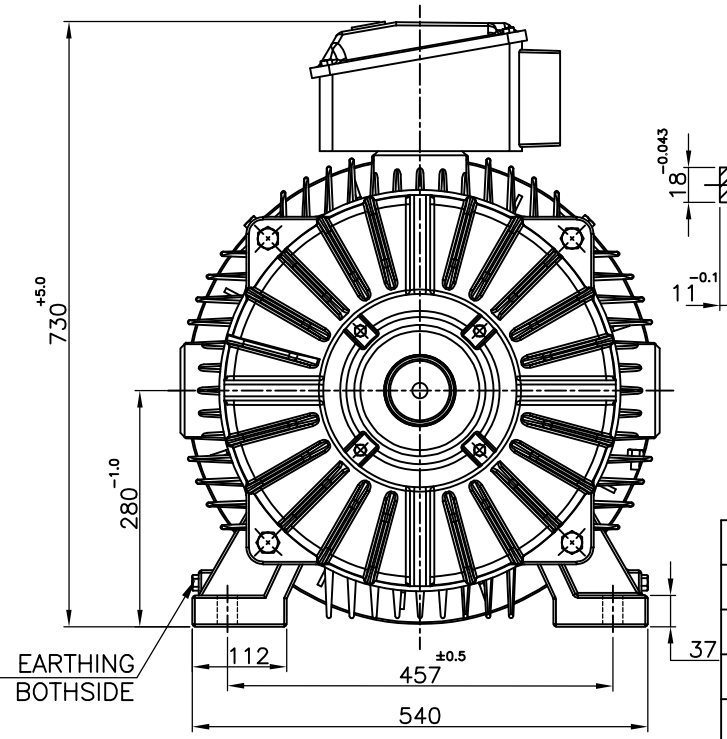

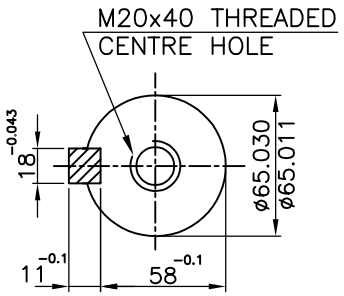

TERMINAL BOX DETAILS

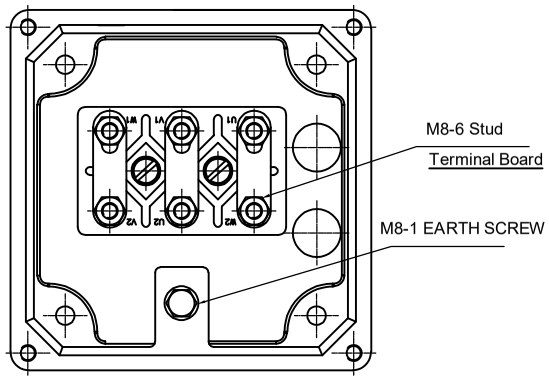

NAME PLATE DETAILS (IS 12615 : 2018)	
MARKING	CE
Frame	LE 280M
Duty	S1
Class of insulation	F
Frequency, Hz	50 ±5%
Pole	2
Connectoin	Delta
Output in KW	90
Voltage in volts	415 ±10%
F.L.Current in Amps	145
Speed in RPM	2970
% Efficiency	95(IE3)
Protection	IP-55
Power Factor	0.91
BRG DE	6317 C3
BRG NDE	6316 C3

ALL DIMENSIONS ARE IN mm

LINEAR DIMENSIONS (MACHINING)	GENERAL TOLERANCES				
	ABOVE	0	30	100	300
	UPTO	30	100	300	1000
	TOL	±0.2	±0.3	±0.5	±0.8
ANGLES	± 1/2°				

DCR. NO	ZONE	ALTERATIONS	SIGN/ DATE

PREPARED	K.SP	12–06–2024
CHECKED	ASP	12–06–2024
APPROVED	K.K.N	12–06–2024
SCALE	NTS	
QUANTITY	1 No	
MATERIAL		
WEIGHT IN kg.	ROUGH / FINISHED	RAW MATERIAL CODE

LAKSHMI ELECTRICAL DRIVES LIMITED
COIMBATORE - 641 004

GA DRAWING
90 kW, 2 POLE, IE3

MODEL	LE 280M	DRG.No. LEH28023002	REV. NO	00